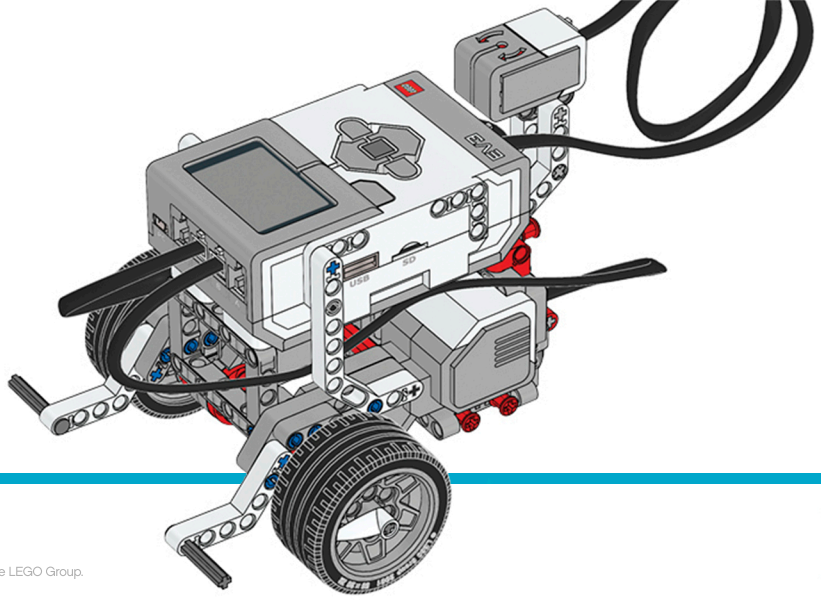

©2015 The LEGO Group.

LEGO mindstorms education EV3

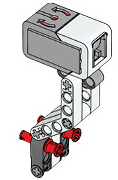

1x

1

2

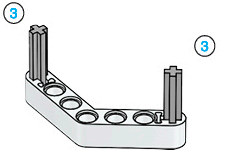

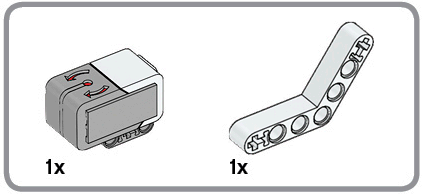

3

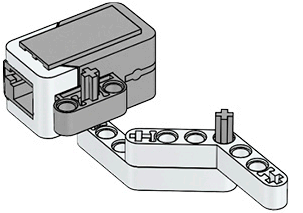

4

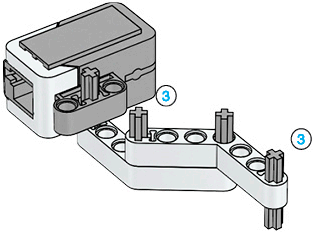

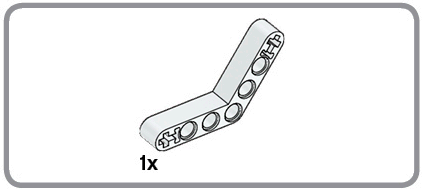

5

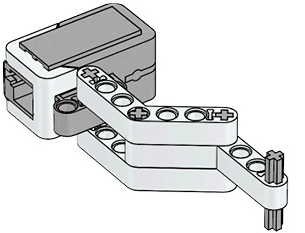

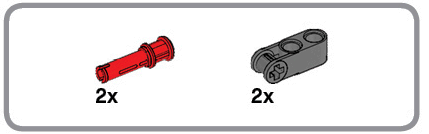

6

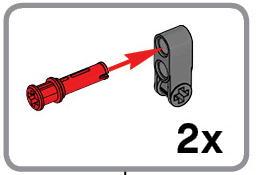

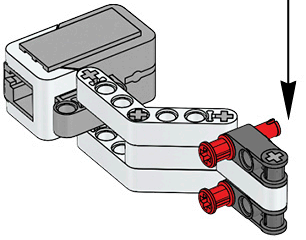

7

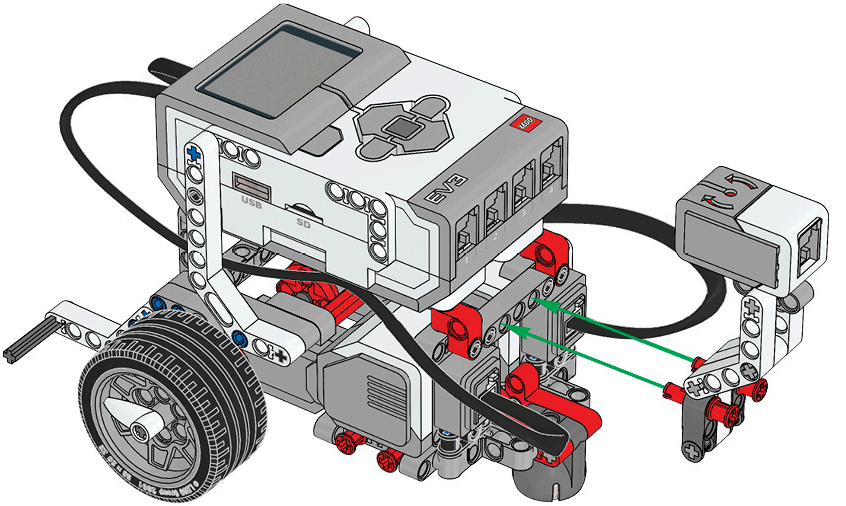

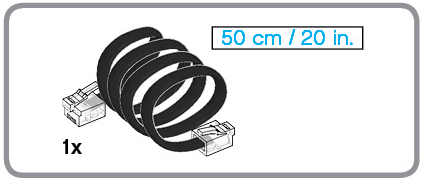

8

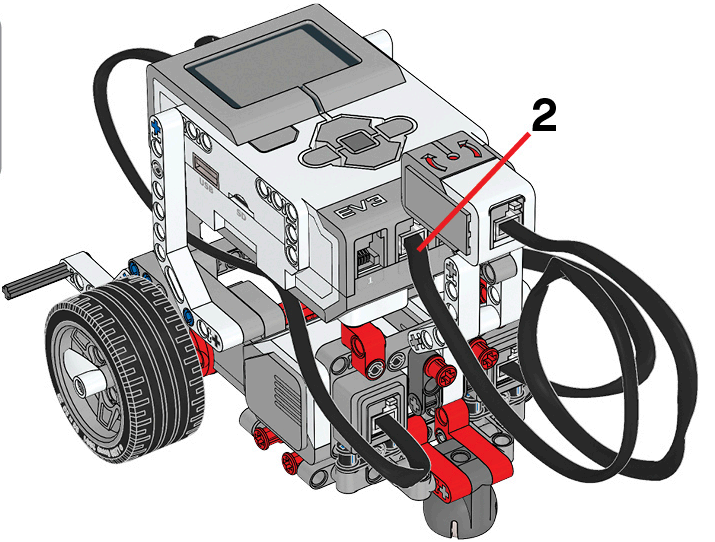
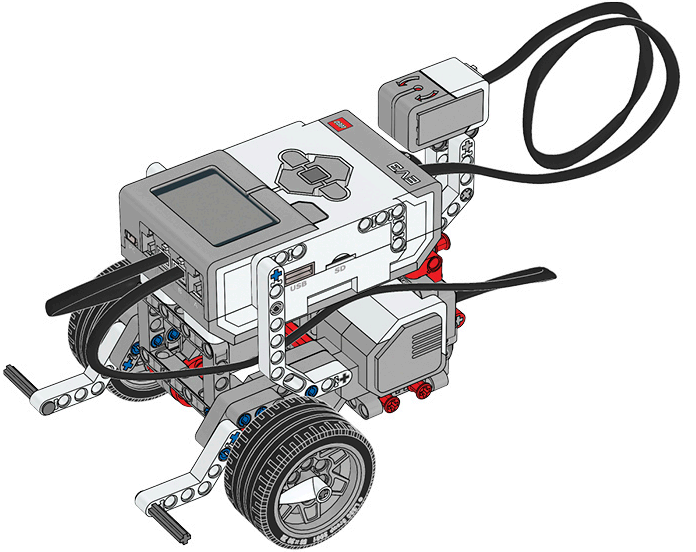
9